Trio GENERATOR

MOTEURS Baudouin

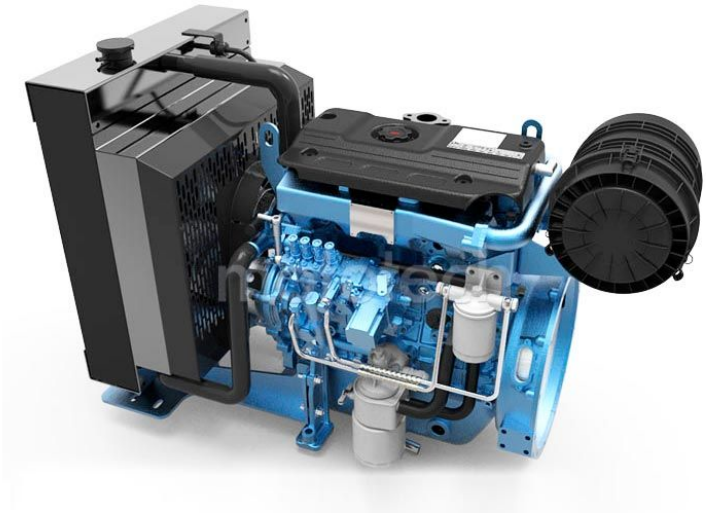

MADE IN TURKEY

International Organization for Standardization ISO 14001:2015

INTERNATIONAL CERTIFICATIONS ISO 9001

OUTPUT VALUES

Standby Power	Voltage	230/400
Standby Power	kVA	72
Standby Power	kW	58
Standby Power	Amper	103,6
Prime Power	Voltage	230/400
Prime Power	kVA	65
Prime Power	kW	42
Prime Power	Amper	93,6

DIESEL ENGINE

Brand	BAUDOUIN
Model	4M10G70/5
Max. Total Output Pow. (kWm/hp)	70/66
Cylinder Displacement (lt)	4,087
Cylinder Orientation	4 Single Line
Bore x Stroke(mm*mm)	105 x 118
Compression Ratio	17.5:1
Governor Type	Electronic
Rotation	1500 RPM
Aspiration System	Turbo AAC
Injection	Direct
Cooling System	Water Cooled
Electrcal System(VDC)	12
Oil Capacity (lt)	13
Engine Coolant Capacity (lt)	19
Fuel Cons. %50 (lt/h)	7,8
Fuel Cons. %75 (lt/h)	11
Fuel Cons. %100 (lt/h)	14,6

ALTERNATOR

Standby Power (kVa/kw)	72/58
Prime Power (kVa/kw)	65/52

Brand	TRIO
Output Voltage (V)	230/400
Frequency (Hz)	50
Stationary Vol. Regulation(±)	0,01
Short Circuit Current	%300 (10 sec)
Insulation	H
Protection	IP23
E ciency (%)	92,7
Overloading	110% for 1 hour
Power Factor (cos Q=0.8)	0,8
Tot. Harmonic Dist. Rate	<2 %
Connection Type	Star
Number of Pole	4
Number of Bearing	Single

DIMENSIONS & WEIGHT

Without Canopy	Width	1000 mm
Without Canopy	Length	2000 mm
Without Canopy	High	1500 mm
Without Canopy	Weight	950 kg
Without Canopy	Fuel Tank Capacity	180 lt
With Canopy	Width	1000 mm
With Canopy	Length	2400 mm
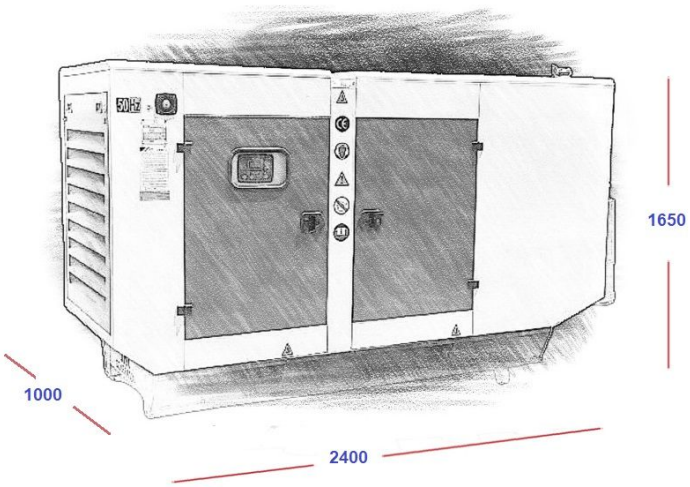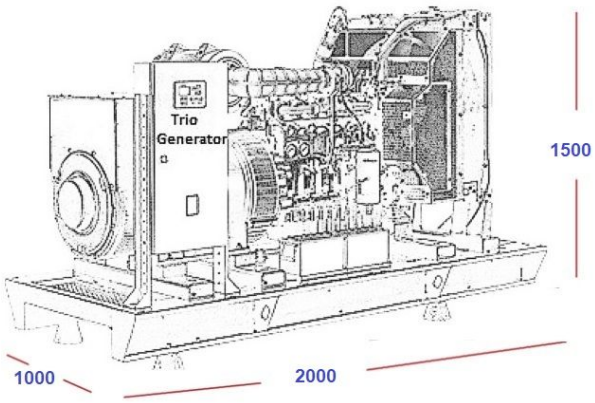
With Canopy	High	1650 mm
With Canopy	Weight	1200 kg
With Canopy	Fuel Tank Capacity	180 lt